NICERC™
AN ACADEMIC DIVISION OF THE
CYBER INNOVATION CENTER

Bringing Cyber to the Classroom

Mission and Objectives

Building the Nation's Cyber Interstate…

- **Foster integrated curricular experiences across multiple disciplines in primary, secondary and post-secondary environments**
- **Promote a culture of educational innovation across a network of college and K-12 faculty around the nation**
- **Develop nation's cyber workforce through the creation and enhancement of STEM and cyber educational opportunities for teachers and students**
- **Create and nationally disseminate innovative practices in education**
- **Serve as a catalyst for future research in cyber education**

CYBER INTERSTATE™

NICERC™
AN ACADEMIC DIVISION OF THE
CYBER INNOVATION CENTER

CYBER INTERSTATE™

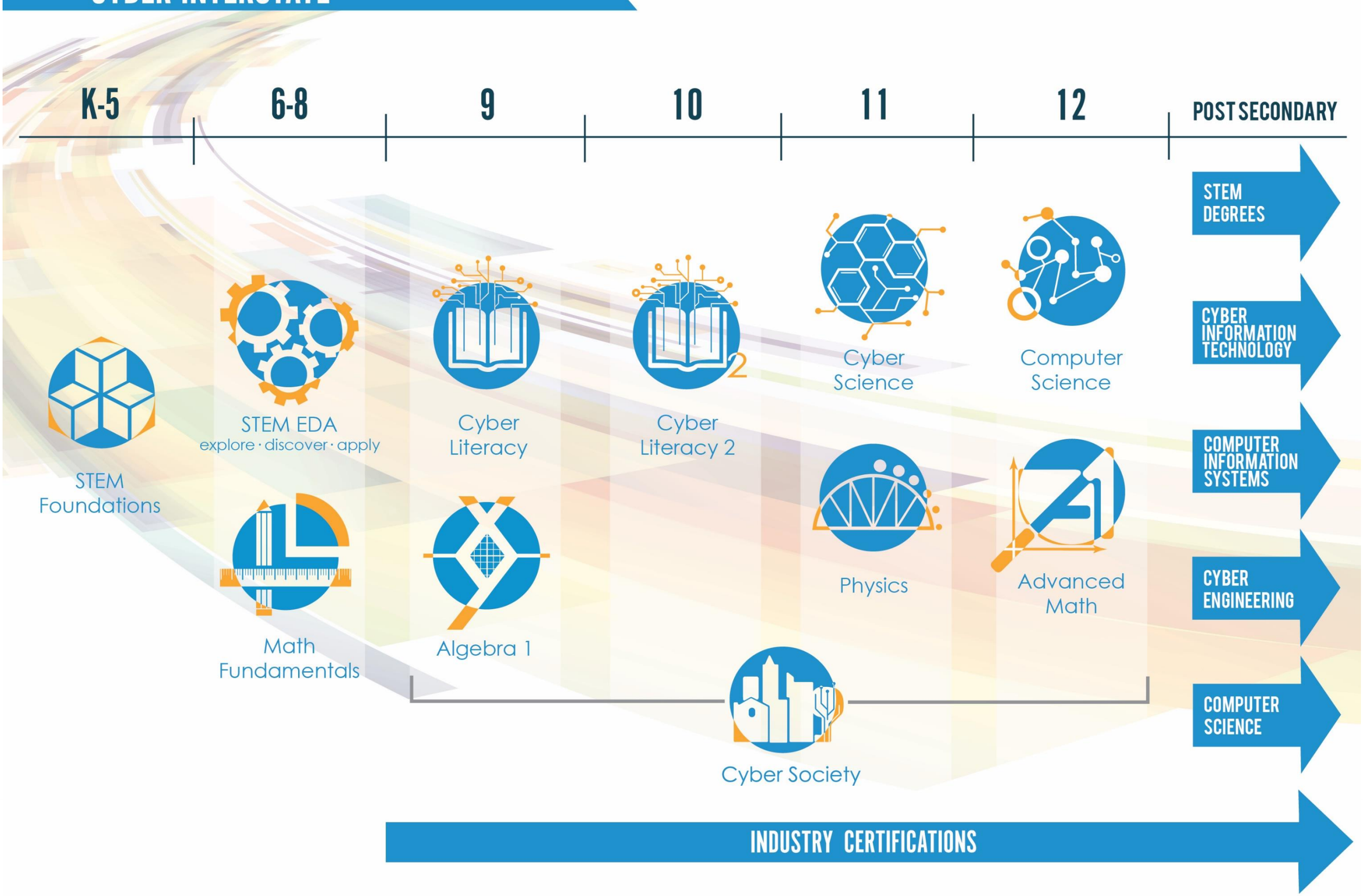

Copyright © 2016 Cyber Innovation Center

Cybersecurity Education and Training Assistance Program Impact

*(A **heat map** of programmatic activity through **September 2016**)*

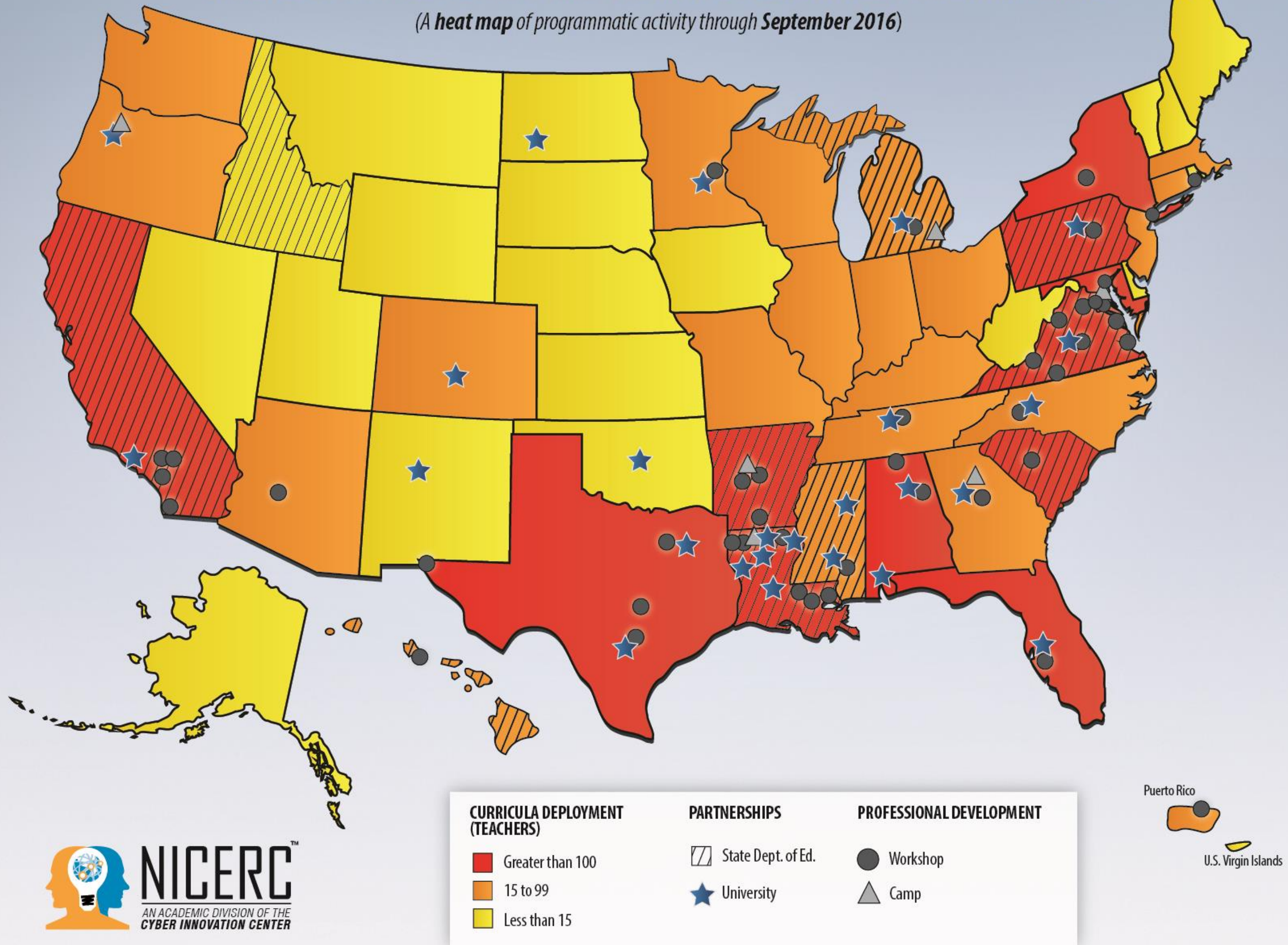

NICERC Curricula Overview

- ***Modular*** **format provides maximum flexibility for teachers**
- **Student engagement and learning improved through NICERC's *project-driven lessons***
- **Infusion of *cyber context* promotes STEM, Cyber, and Computer Science awareness into daily instruction**
- **Builds *STEM*, *Cyber*, and *Computer Science* foundation essential for *future cyber professionals***
- **"Soft Skill" development integrated into lessons**
- **Maps to *national standards***
- **Links to *industry certifications***
- **Increases preparedness and participation in *cybersecurity education* and *degree programs***

NICERC™
AN ACADEMIC DIVISION OF THE CYBER INNOVATION CENTER

Copyright © 2016 by the Cyber Innovation Center

The Engineering Design Process (EDP)

NICERC™
AN ACADEMIC DIVISION OF THE CYBER INNOVATION CENTER

STEM EXPLORE™

STEM Explore Standards at a Glance

Module Name	Teacher Manual	Student Workbook	Resources	Standards
Egg Drop	Teacher Manual	Student Workbook	Additional Pages Test A Test B Data Sheet Presentation Concept Review Vocabulary Review	Egg Drop Standards
Volcano	Teacher Manual	Student Workbook	Test A Blank pH Scale / pH Scale with Substances Types of Volcanoes Types of Eruptions Concept Review Cyber Connection	Volcano Standards
Roller Coaster	Teacher Manual	Student Workbook	Roller Coaster Design Rubric Presentation	Roller Coaster Standards
Electricity	Teacher Manual	Student Workbook	Additional Pages Workshop Presentation Workshop Handout Cyber Attacks Map Story Status Bars Flashlight Rubric	Electricity Standards
Genetics	Teacher Manual	Student Workbook	Additional Pages	Genetics Standards
Catapult	Teacher Manual	Student Workbook	Additional Pages Area Formulas Teacher Area Formulas Student	Catapult Standards
Cars	Teacher Manual	Student Workbook	Additional Pages	Cars Standards
Music	Teacher Manual	Student Workbook	Additional Pages	Music Standards
Alternative Energy	Teacher Manual	Student Workbook		Alt. Energy Standards
Earthquakes	Teacher Manual	Student Workbook	Additional Pages Live Earthquakes Map	Earthquake Standards

NICERC™
AN ACADEMIC DIVISION OF THE
CYBER INNOVATION CENTER

COMPUTER SCIENCE™

Computer Science NICERC Curriculum

NICERC Computer Science

- “Computational thinking”
- Languages: Scratch, Python
- Creation
- Games: “Simon”, “Catch the Baby”
- Puzzle-based

Computational Thinking

- "Computational thinking"

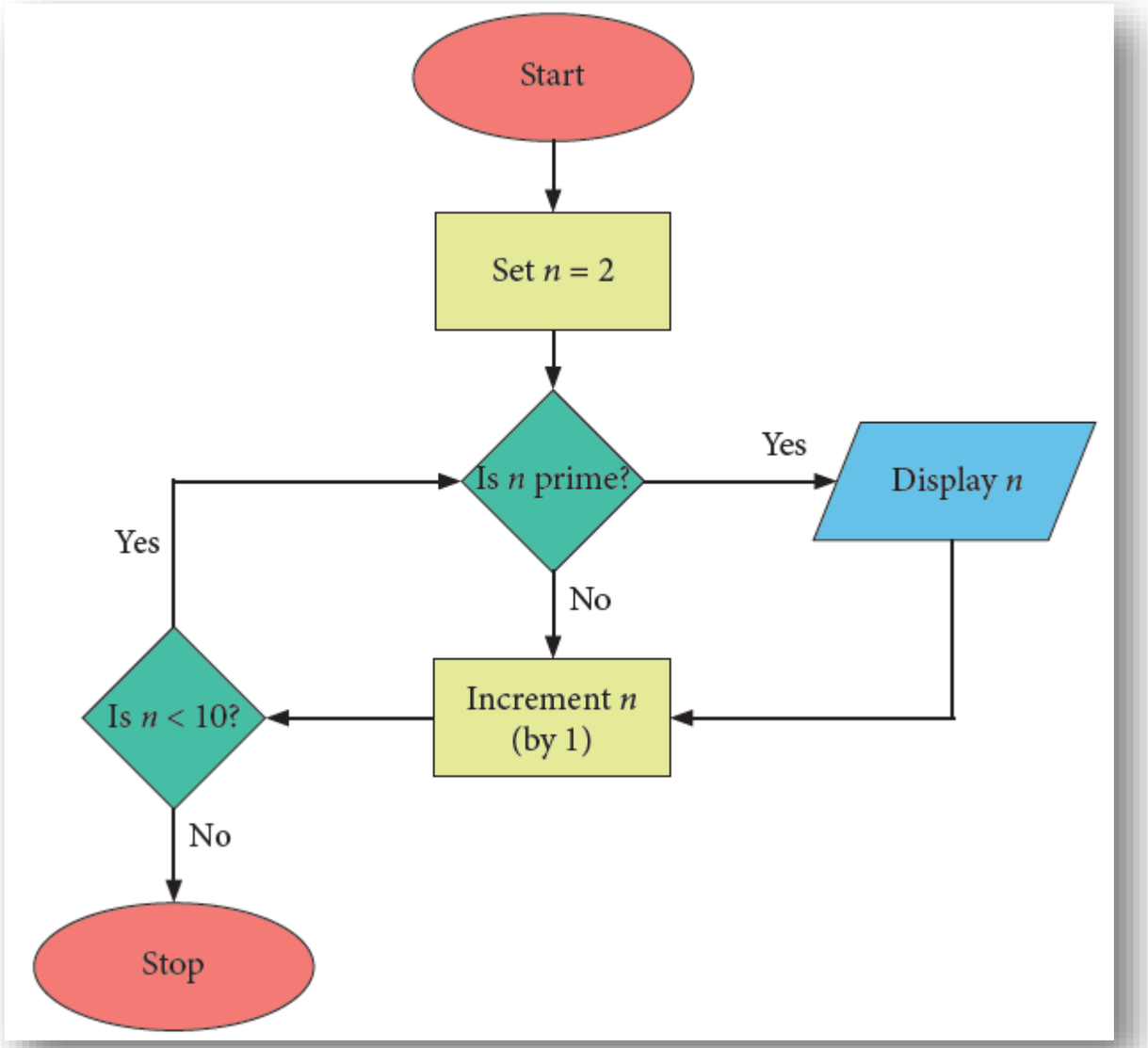

NICERC™
AN ACADEMIC DIVISION OF THE
CYBER INNOVATION CENTER

Languages

- Scratch

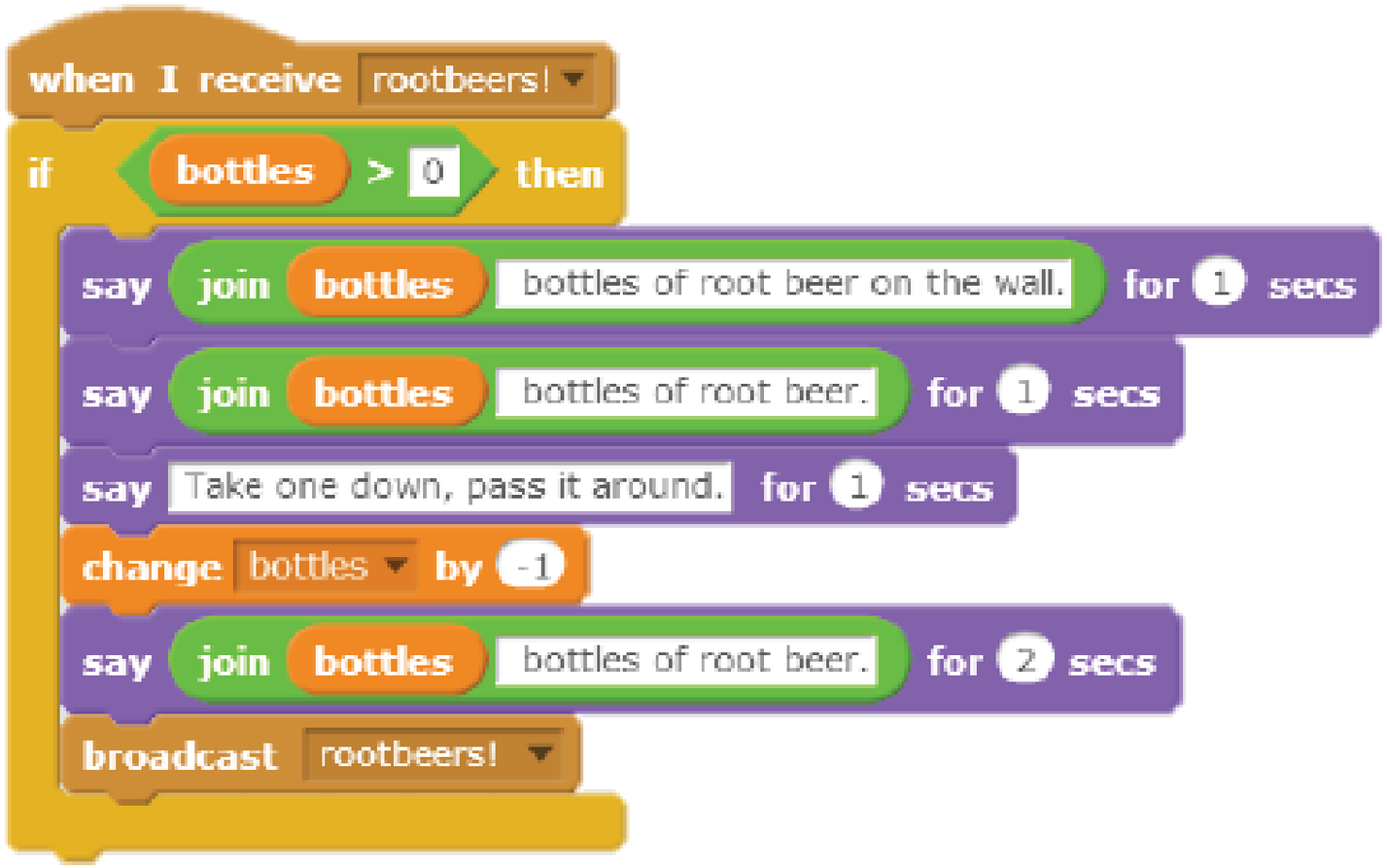

Languages

- Scratch → Python

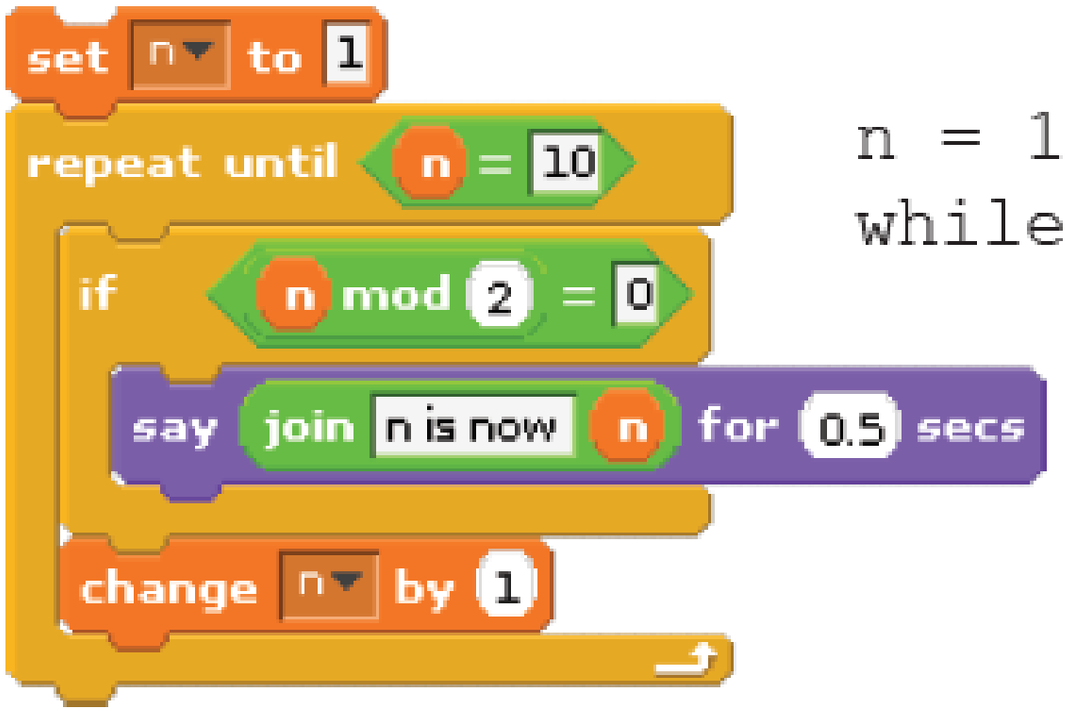


```
n = 1
while n < 10:
    if n % 2 == 0:
        print "n is now " + str(n)
    n = n + 1
```

NICERC™
AN ACADEMIC DIVISION OF THE
CYBER INNOVATION CENTER

Languages

- Python

```
def fact(n):
    if (n == 0):
        return 1
    else:
        return n * fact(n - 1)
```

```
def hanoi(n, src, dst, spr):
    if (n == 1):
        print "{} -> {}".format(src, dst)
    else:
        hanoi(n - 1, src, spr, dst)
        hanoi(1, src, dst, spr)
        hanoi(n - 1, spr, dst, src)
```

Creation

- Computer Science is about organization and creation
- Student projects *empower* and *engage*

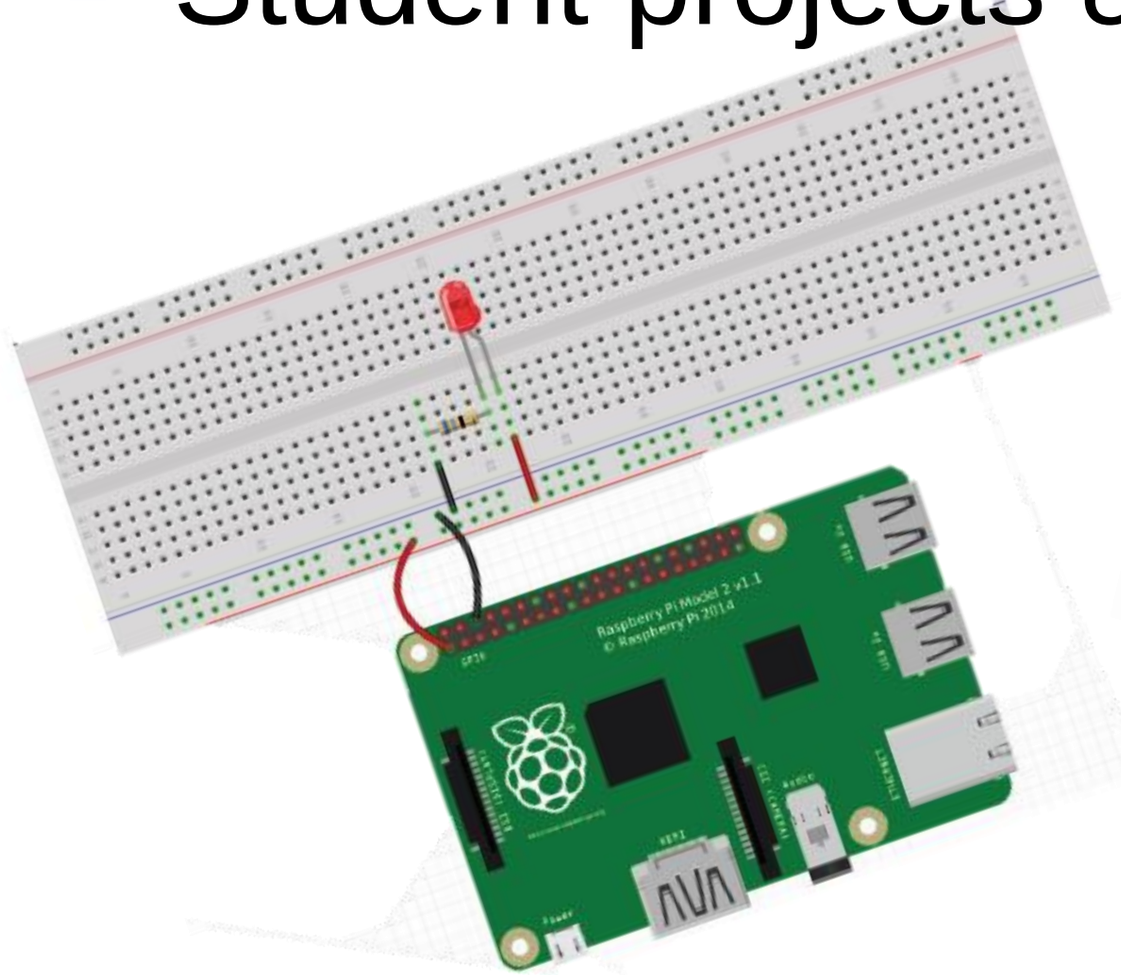

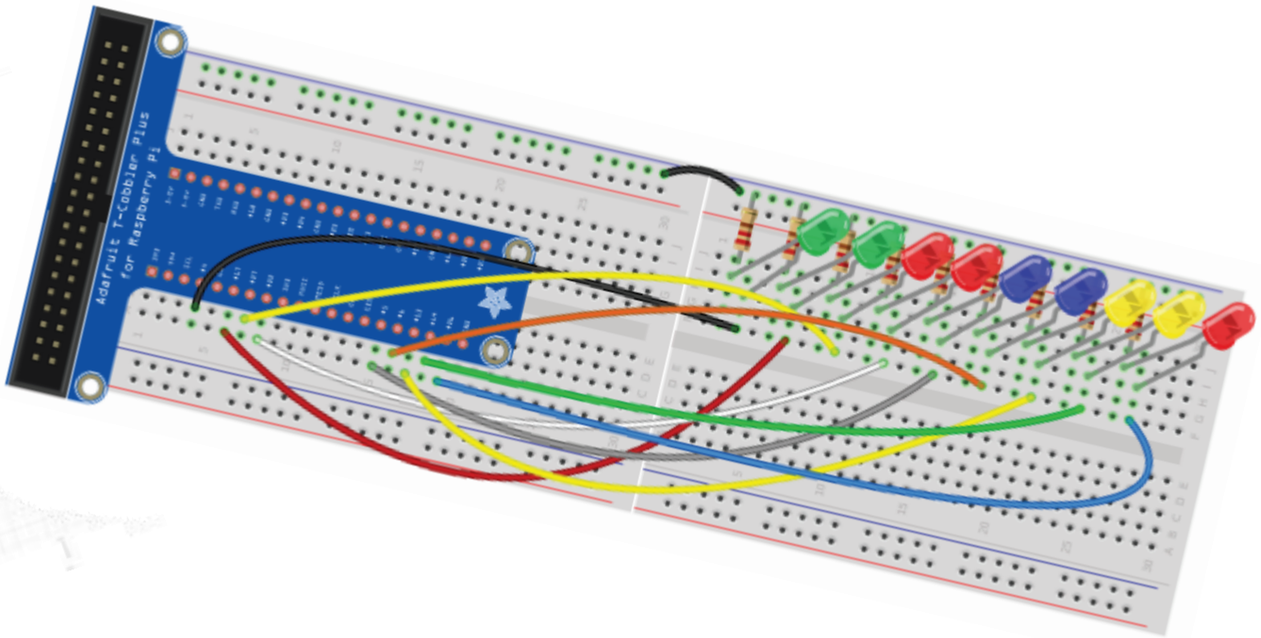

Games

- “Simon”
- “Catch the Baby”

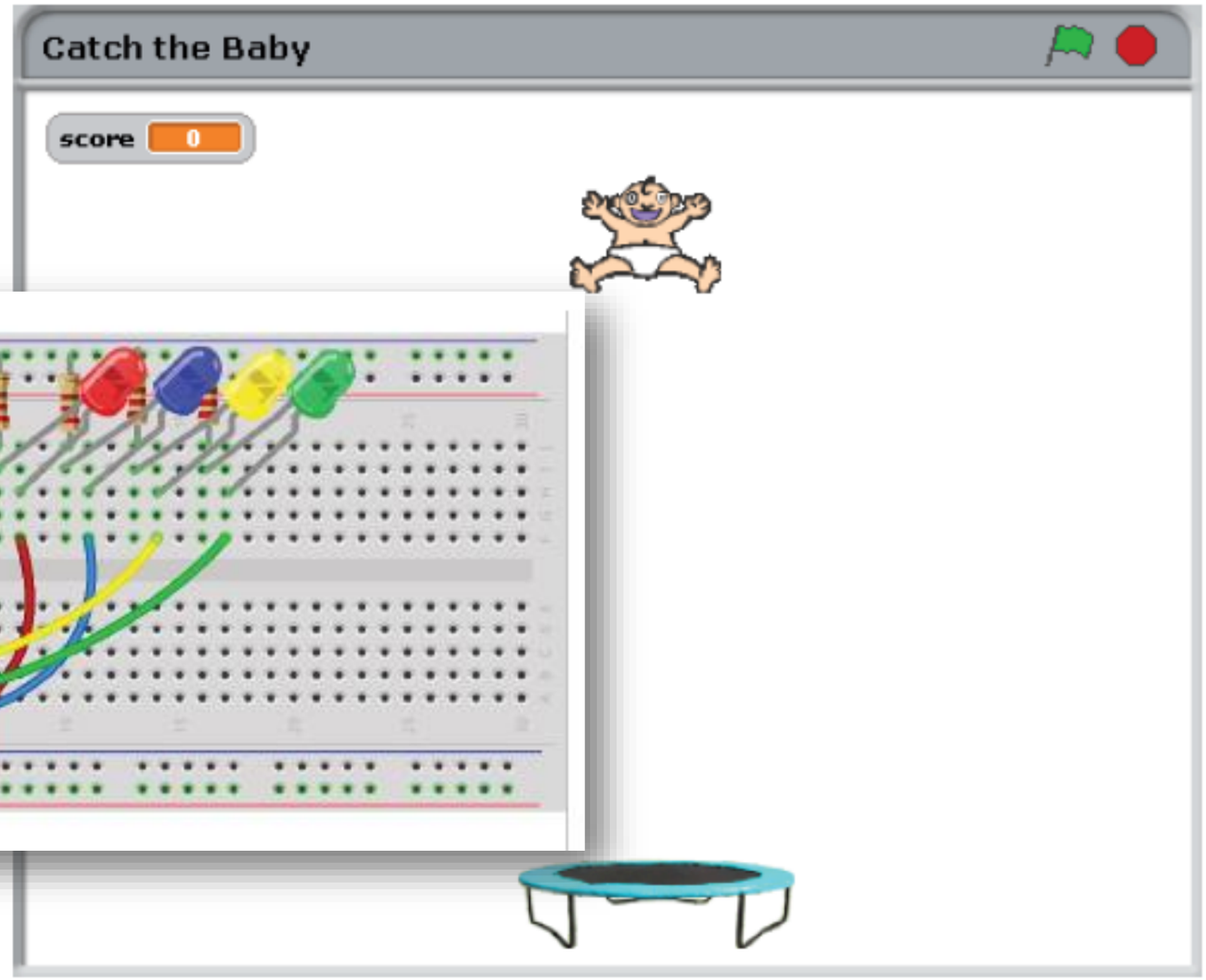

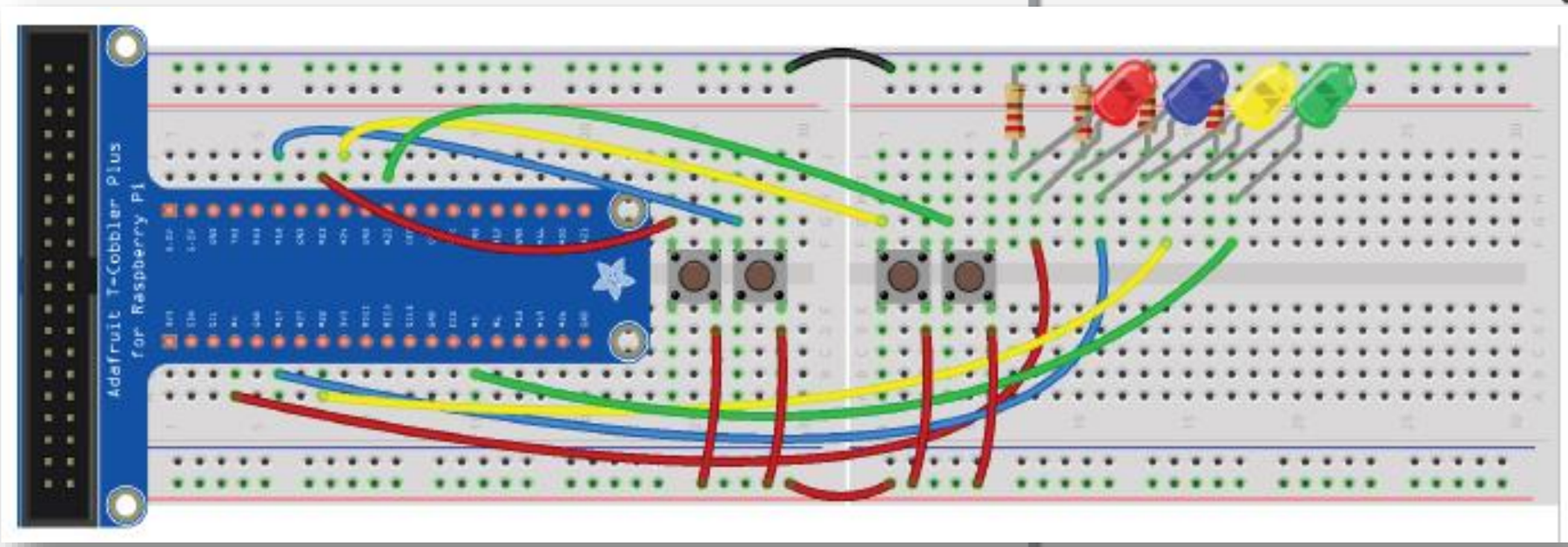

Puzzle-Based Discovery

- Puzzle-based
- Socratic discovery

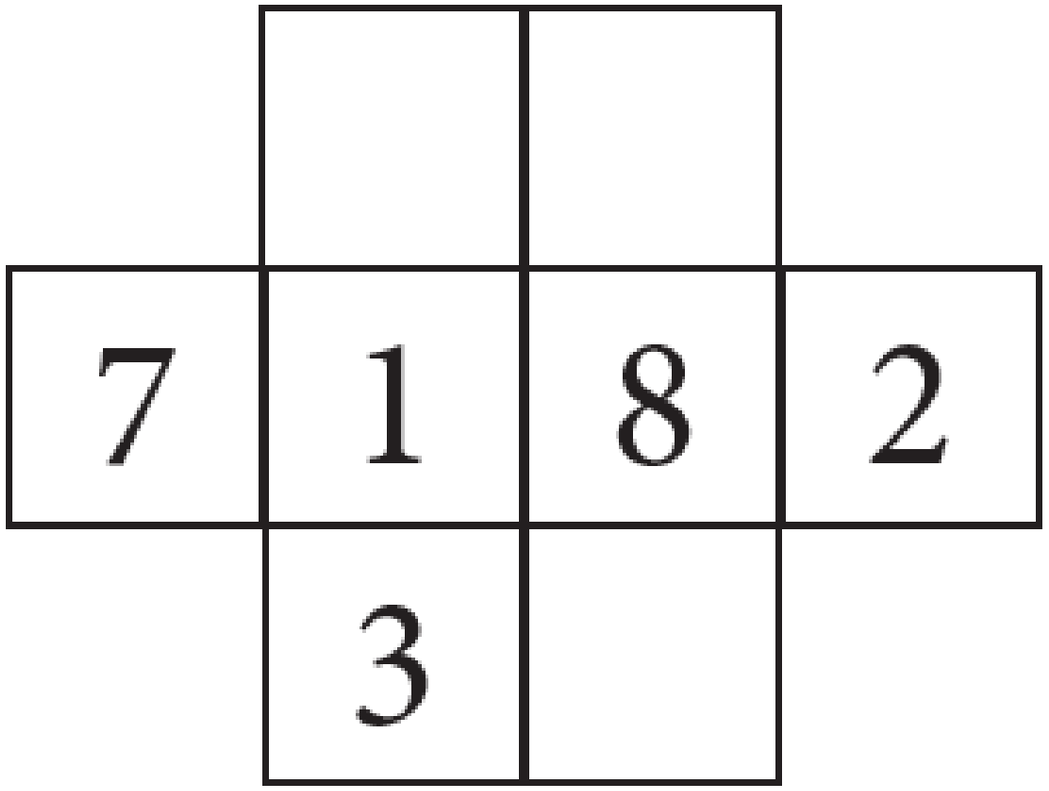

Puzzle-Based Discovery

- Puzzle-based
- Socratic discovery

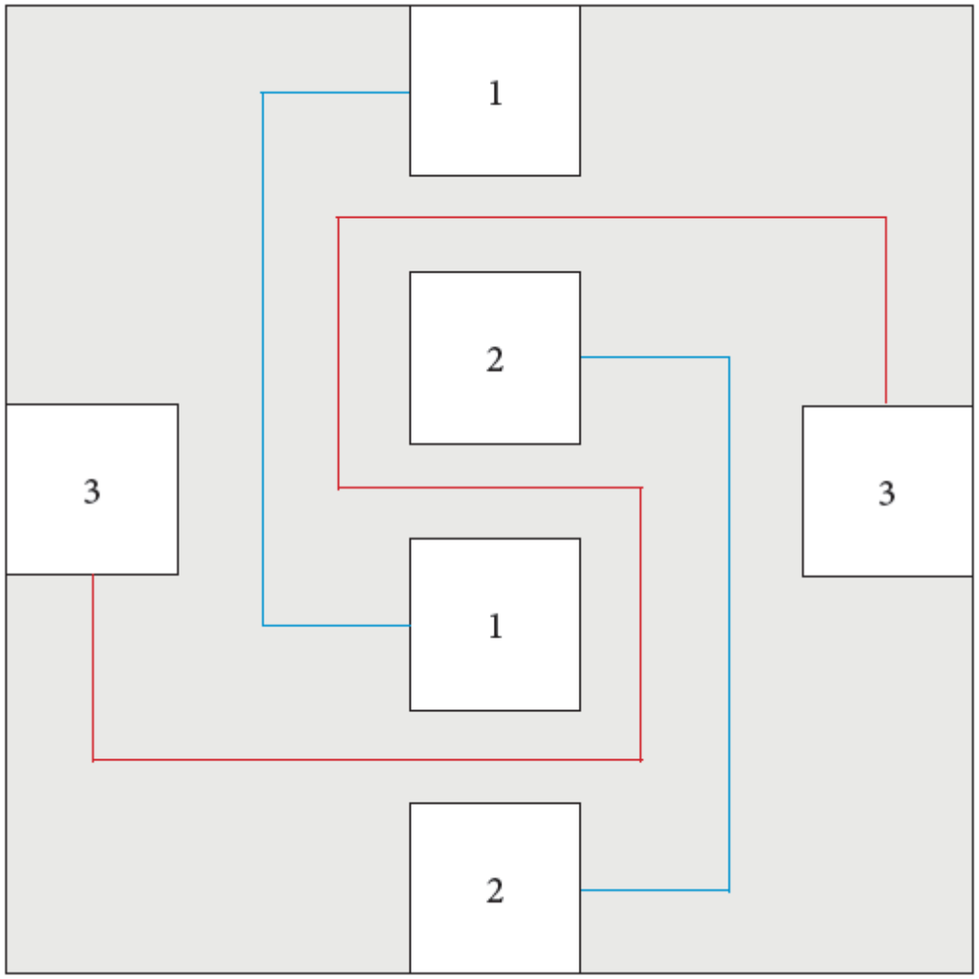

Questions?

“Ok, so how do I get it again?”

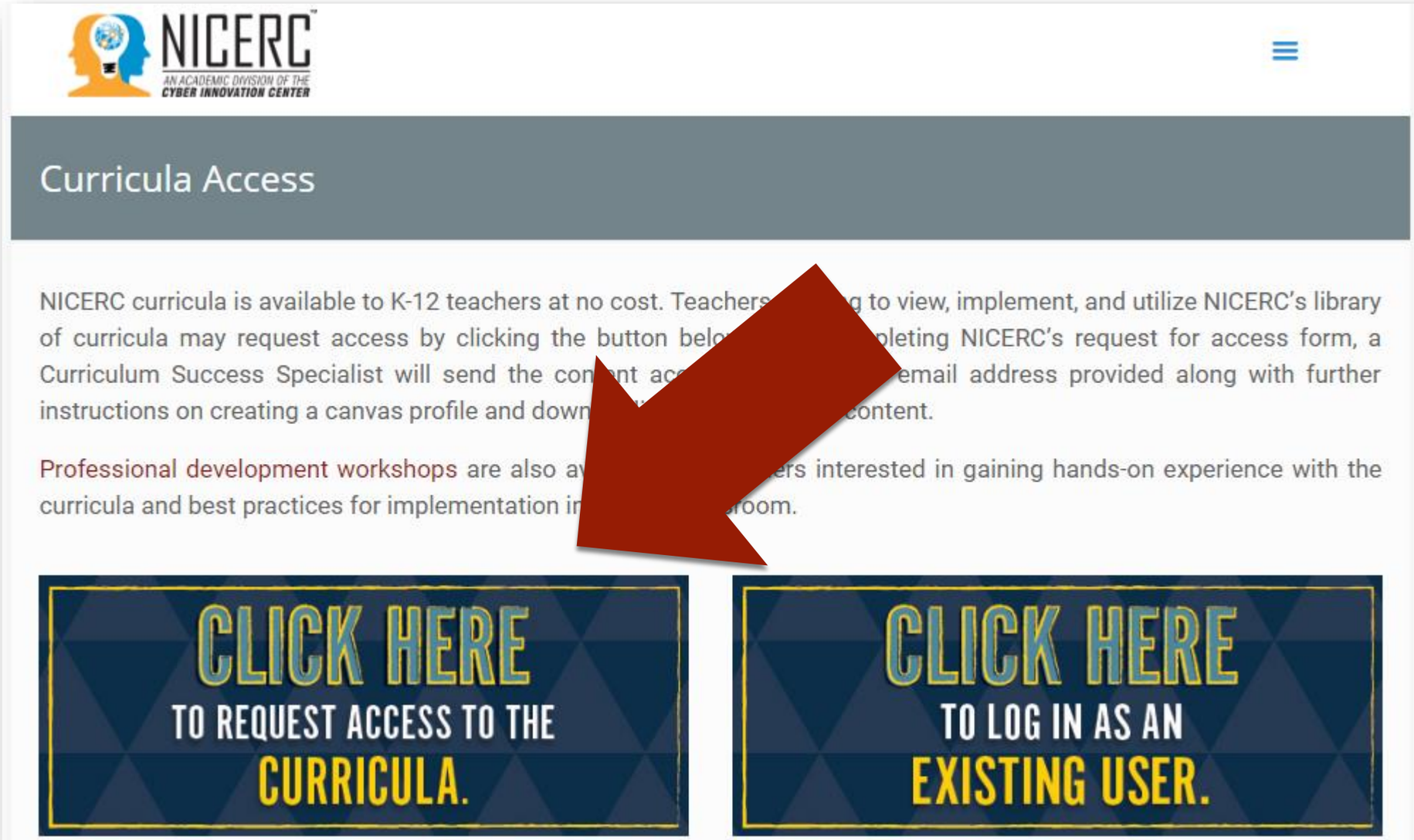

NICERC™
AN ACADEMIC DIVISION OF THE
CYBER INNOVATION CENTER

Bringing Cyber to the Classroom